Ilmiy tadqiqotlar va ularning yechimlari jurnali
Aoka guvohnoma № 323759 ISSN: 3060-4818

MODELING OF KARMAN VORTICES AROUND A CYLINDER IN CFD AND LABORATORY CONDITIONS

Buranov Khudoyar
Dept. of Theoretical and Engineering Mechanics
of Samarkand State University, PhD, Assoc. Prof.
xmburonov@gmail.com

Turaev Umarkhon
Dept. of Theoretical and Engineering Mechanics
of Samarkand State University, Master
turaev.umarkhon@samdu.uz
https://doi.org/10.5281/zenodo.20520697

Annotation. Studying the laws of fluid flow around various geometric shapes is considered one of the modern problems in the fields of fluid dynamics and aerodynamics, and the solutions to such problems are currently determined through modeling methods. In this article, the flow around a straight tapered and a curved profile (winglet), as well as around a cylinder, was visually analyzed using the HM 150.21 laboratory equipment, and the problem of flow past a cylinder was modeled using the ANSYS – Fluid Flow (Fluent) software. The research primarily provides a conclusion regarding the formation of Karman vortices and how the velocity changes as a result of flowing around various shapes.
Keywords: Karman vortices, cylinder, linearly converging profile, curved profile, ANSYS, CFD, HM 150.21 laboratory apparatus, flow velocity, dead zones.

CFD VA LABORATORIYA SHAROITIDA SILINDR ATROFIDAGI KARMAN UYURMALARINI MODELLASHTIRISH

Annotatsiya: Suyuqlik oqimining turli geometrik shakldagi atrofida oqib o‘tish qonuniyatlarini o‘rganish gidrodinamika, aerodinamika sohasining zamonaviy muammolaridan biri hisoblanadi va bunday muammolar yechimlari hozirda modellashtirish usullari orqali aniqlanadi. Ushbu maqolada tekis torayuvchi va egri profil (qanotcha) atrofidagi va silindr atrofidagi oqim HM 150.21 laboratoriya uskunasi orqali vizual tahlil etildi hamda ANSYS - Fluid Flow (Fluent) dasturi yordamida silindrdan oqib o‘tuvchi oqim masalasi modellashtirildi. Tadqiqotda asosan Karman uyurmalari hosil bo‘lishi va turli shakllardan oqib o‘tish natijasida tezlik qanday o‘zgarishi bo‘yicha xulosa berilgan.
Kalit so‘zlar: Karman uyurmalari, silindr, tekis torayuvchi profil, egri profil, ANSYS, CFD, HM 150.21 laboratoriya uskunasi, oqim tezligi, o‘lik zonalar.

МОДЕЛИРОВАНИЕ ВИХРЕЙ ЦИЛИНДРА В CFD И ЛАБОРАТОРНЫХ УСЛОВИЯХ

Аннотация. Изучение закономерностей обтекания жидкостью тел различной геометрической формы является одной из современных проблем гидродинамики и аэродинамики, а решения подобных задач в настоящее время определяются с помощью методов моделирования. В данной статье проведён визуальный анализ потока вокруг прямолинейно сужающегося и криволинейного профилей (крылышка), а также вокруг цилиндра с использованием лабораторной установки НМ 150.21, и выполнено моделирование задачи обтекания цилиндра потоком с помощью программного комплекса ANSYS - Fluid Flow (Fluent). В исследовании в основном представлены выводы о формировании вихрей Кармана и о том, как изменяется скорость потока в результате его обтекания тел различной формы.

Ключевые слова: Вихри Кармана, цилиндр, прямолинейно сужающийся профиль, криволинейный профиль, ANSYS, CFD, лабораторная установка HM 150.21, скорость потока, мёртвые зоны.

Problem Statement. The flow of fluids around bodies with different geometric shapes gives rise to complex hydrodynamic phenomena, including variations in velocity, pressure distribution, and vortex formation. In particular, the Kármán vortices generated behind cylindrical and airfoil-shaped bodies can cause structural vibrations, increased aerodynamic drag, and energy losses. Therefore, investigating the interaction between fluid flow and such bodies through both experimental and numerical methods is an important scientific and engineering problem. In this study, the flow characteristics around a cylinder and a profile body, with special emphasis on the formation of Kármán vortices, are analyzed using the HM 150.21 laboratory apparatus and numerical simulations performed in ANSYS Fluent.

CFD Methodology. This process can be modeled using the ANSYS software. During the geometry creation stage, the cylindrical body is represented as a 2D circle, allowing the flow domain to be defined such that no fluid passes through the cylinder itself. After generating the computational mesh, the model can be visualized as shown below:

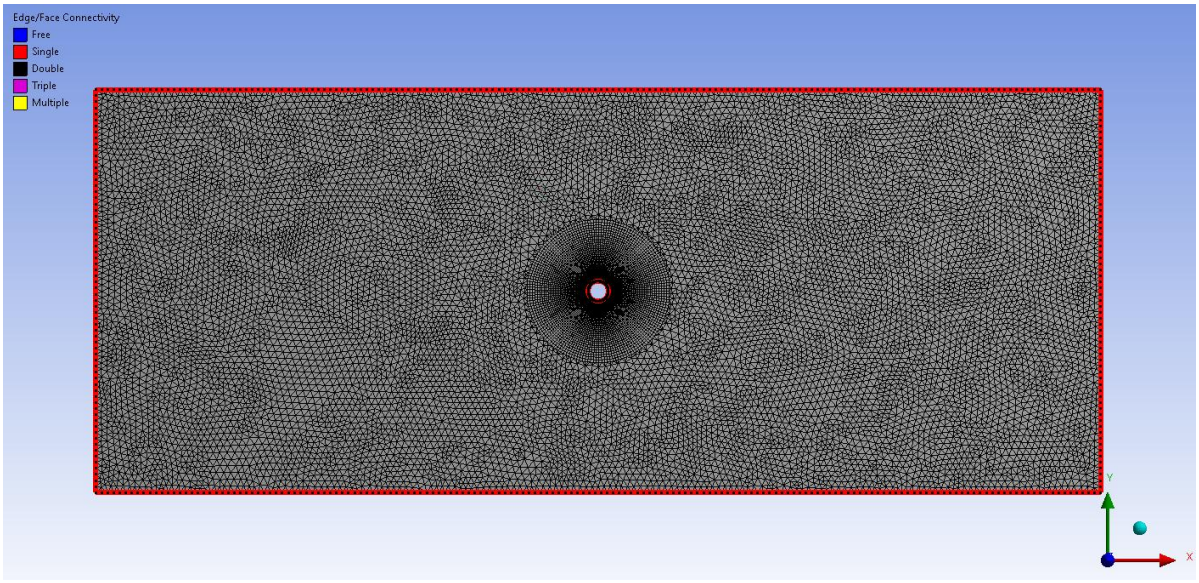

Fig. 1. Flow Model Around a Cylinder in ANSYS

Once all necessary input data and boundary conditions were defined, the numerical simulation was performed.

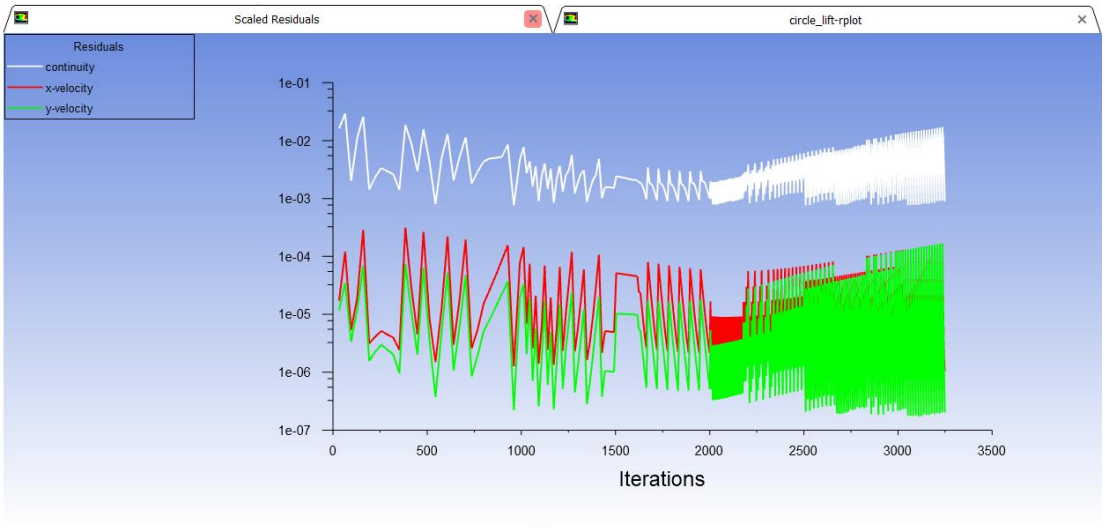

Fig. 2. Residual Error Graph

The convergence history shown in the figure above indicates that the solution reached convergence after approximately 3,250 iterations**.** The flow characteristics obtained from the simulation can be examined through the Results module, where the velocity and vortex structures are visualized as presented in the following figures.

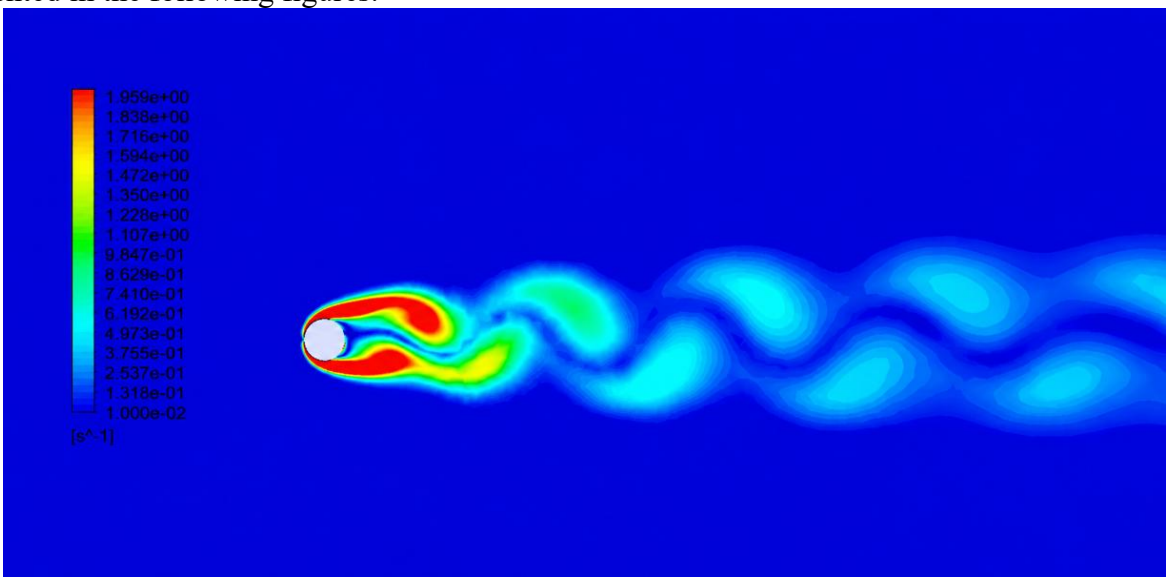

Fig. 3. Visualization of the Kármán Vortex Street in ANSYS

Experimental procedure. When the flow of a fluid passes around a cylinder (or a sphere, cuboid, airfoils, etc.), and the velocity reaches a certain value, a Kármán vortex street is formed behind the cylinder. The HM 150.21 laboratory apparatus is designed for flow visualization in open channels and allows the study of how different obstacle shapes affect the flow. It also enables the visual analysis of supercritical and subcritical flow conditions. By scanning the QR code, you can obtain more detailed information about the HM 150.21 equipment.

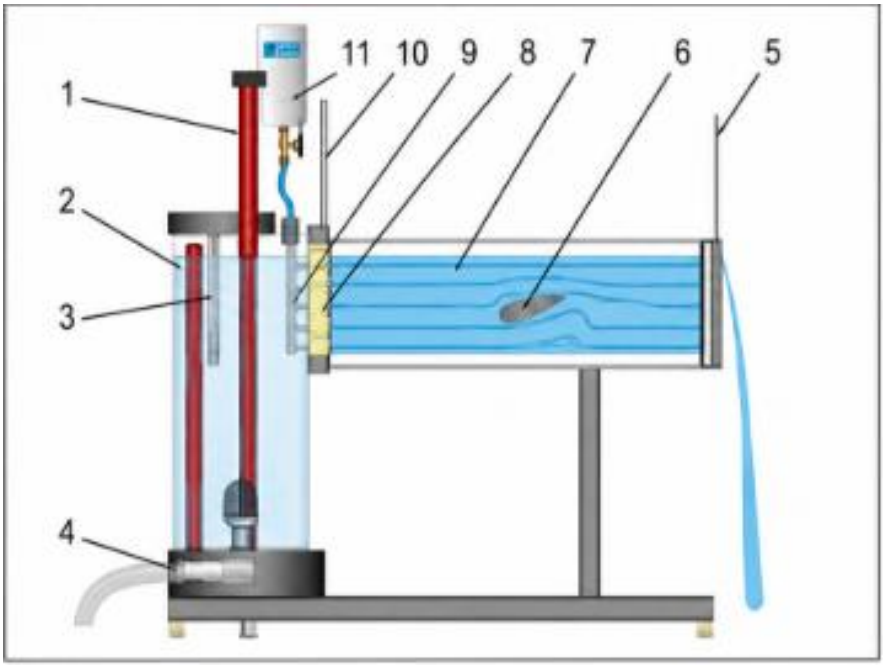

Fig. 4. HM 150.21 laboratory equipment

1-adjustable overflow, 2-tank, 3-scale, 4-water supply from HM 150, 5-weir at the water outlet, 6-drag boy, 7-experimental flume, 8-flow straightener, 9-distributor for contrast medium, 10-sluice gate at the water inlet to the experimental flume, 11-tank for contrast medium.

Below you can see images obtained by conducting a flow experiment around airfoils:

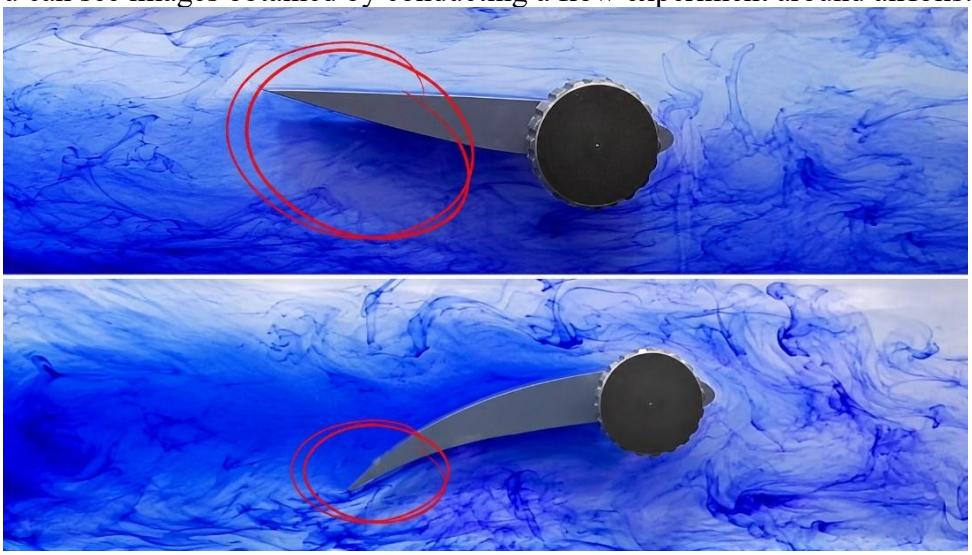

Fig. 5. Experimental visualization of flow around a converging flat plate and a curved profile

The areas marked in red in the figure represent dead zones, where the fluid tends to accumulate. In these regions, vortices are formed, and an uneven distribution of velocity and pressure occurs as the flow passes through this section.

Likewise, we can also perform an experiment of flow around a cylinder using the same apparatus:

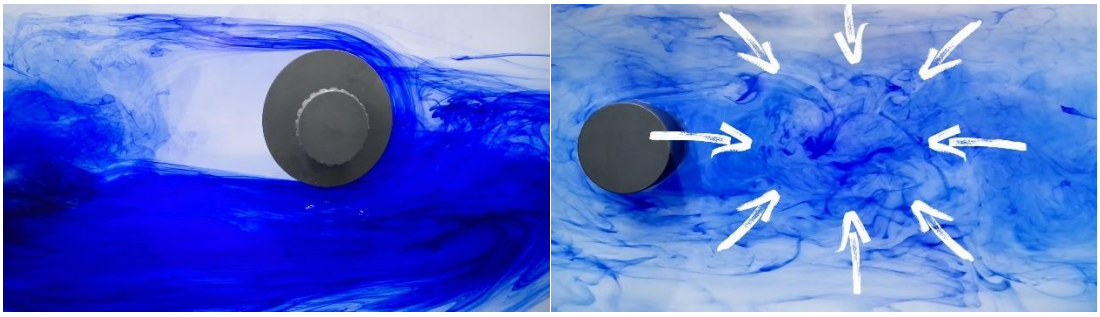

Fig. 6. Experimental visualization of flow around a cylinder

As can be seen in Fig. 21, at low flow velocity, flow separation is observed but no vortices are formed, meaning that the flow does not mix turbulently. This is because the upper and lower layers of the flow do not collide with sufficient velocity after passing around the object. When the velocity is increased, the white-marked region indicates the beginning of the Kármán vortex street formation. If the length of the apparatus were greater, this vortex formation phenomenon could eventually disappear, and the flow would become uniform again.

Results and Discussion. The formation of Kármán vortices behind a circular cylinder was modeled and analyzed using ANSYS – Fluid Flow (Fluent). At an inlet velocity of u_m=1 m/s, the flow remains relatively stable and no distinct vortex shedding is observed. However, as the velocity increases, the separated shear layers from the upper and lower surfaces of the cylinder begin to interact in the wake region, leading to an unstable pressure field and the periodic formation of Kármán vortex streets.

The simulation results show that the flow velocity increases up to u_m^{max}=1.96 m/s around the cylinder, indicating strong local acceleration and energy redistribution in the wake. This condition promotes continuous vortex shedding downstream of the cylinder.

The Kármán vortices are primarily caused by flow separation and pressure imbalance between the upper and lower shear layers. From an engineering perspective, their presence is generally undesirable, as they increase drag forces and induce structural vibrations, which may lead to fatigue and reduced system stability.

To reduce or eliminate vortex formation, several strategies can be applied:

-use of streamlined geometries instead of bluff bodies;

-maintaining the flow velocity outside the critical range;

-reducing the effective flow separation angle;

-replacing cylindrical shapes with airfoil-like profiles.

Conclusion. In this study, the flow around a circular cylinder and airfoil-shaped bodies was investigated experimentally using the HM 150.21 laboratory apparatus and numerically using ANSYS Fluent. The results show that at low flow velocities the flow remains stable and no distinct vortex formation occurs. As the flow velocity increases, separated shear layers from the upper and lower sides of the cylinder interact in the wake region, leading to the formation of Kármán vortices.

The formation of these vortices is mainly caused by flow separation and pressure imbalance, which increases aerodynamic drag and may induce structural vibrations. Therefore, reducing vortex formation is important in engineering applications to improve flow stability and system performance.

Overall, the results confirm that both geometry and flow velocity significantly influence flow behavior and play a key role in controlling vortex formation in fluid dynamics systems. Through the following link, you can watch the video recording of the experiment conducted using the HM 150.21 laboratory apparatus. https://t.me/mexanika_Uzb/1411

REFERENCES

1. White, F. M. Fluid Mechanics. 8th Edition. McGraw-Hill Education, 2016.
2. Turaev, U. Analysis of Hemodynamic Patterns in a Scaled Aortic Bifurcation Model Using the Reynolds Criterion. Proceedings of the Republican Scientific-Practical Conference on “Problems of Implementing Digital Technologies and Modern Methods into the Educational Process”, Kattakurgan State Pedagogical Institute, 2026, p. 658.
3. Schlichting, H., & Gersten, K. Boundary-Layer Theory. 9th Edition. Springer, 2017.
4. Abdirashidov, A. Practical Exercises in Hydraulics. Methodical Manual. Samarkand: Samarkand State University Press, 2007. – 114 p.
5. Xudoynazarov, X., & Abdirashidov, A. Fluid and Gas Mechanics. Textbook. Samarkand: Zarafshan Publishing House, 2017. – 360 p.
6. Anderson, J. D. Computational Fluid Dynamics: The Basics with Applications. McGraw-Hill, 1995.
7. Degtyarev, V. V., & Dzyubenko, L. F. Hydraulics: Study Guide and Laboratory Manual. NSASU, 2004.